Model 3150 Downflow

Parts Book

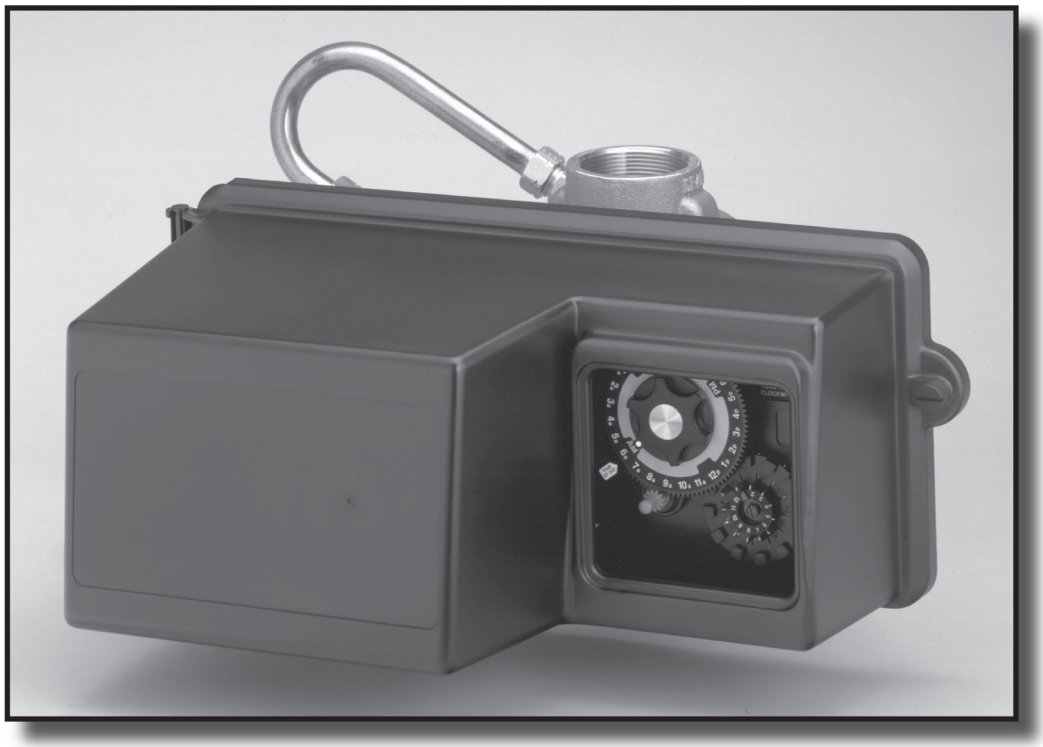

www.watergem.com

Control Valve Assembly

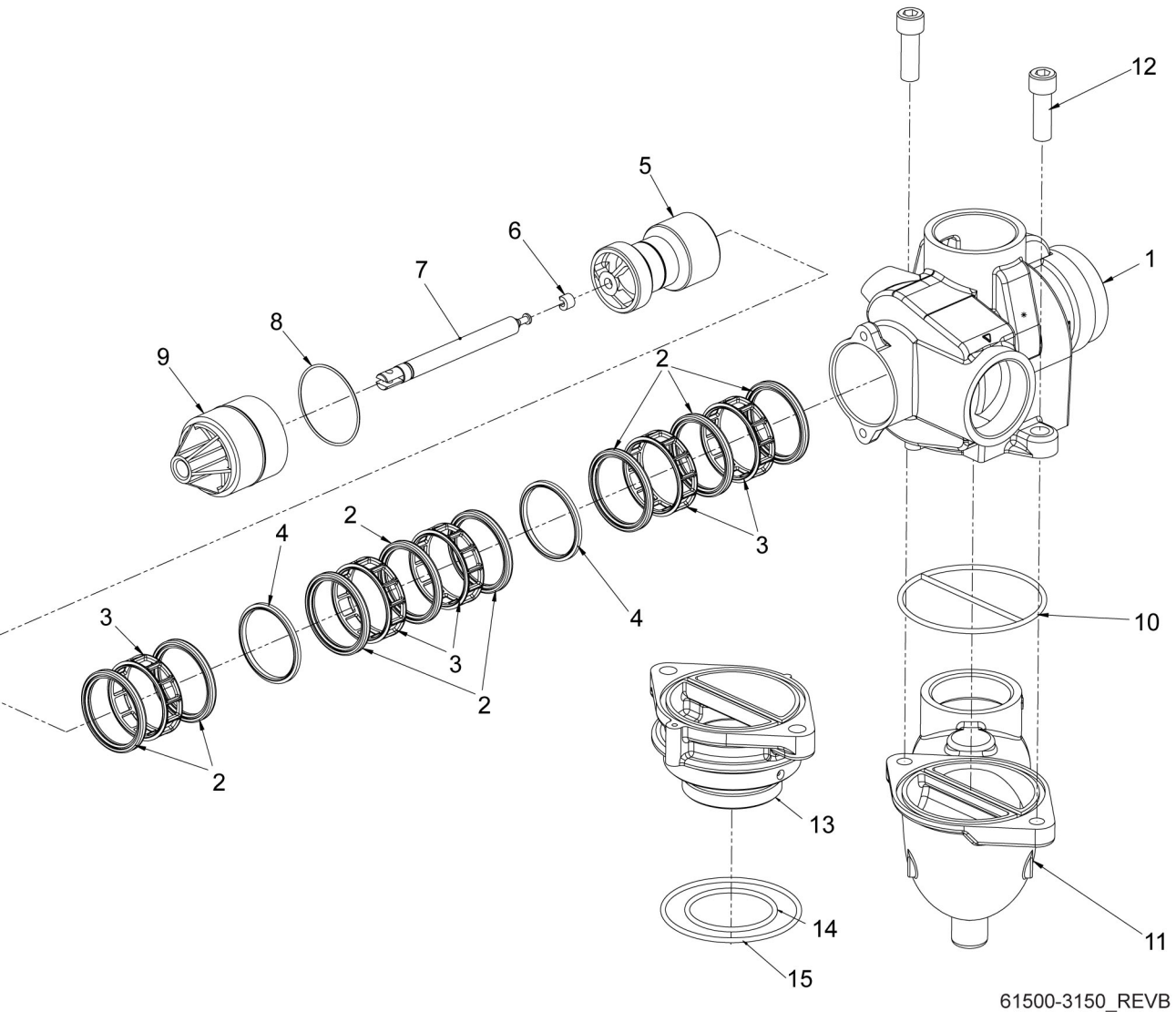

61500-3150_REVB

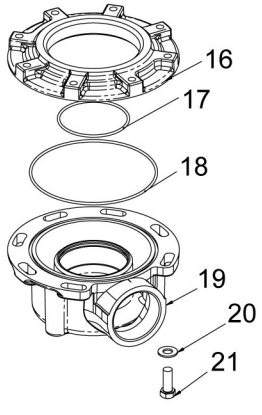

61414_REVA

Item No.	Quantity	Part No.	Description
1	1	15114	Valve Body, 3150
2	8	11720	Seal, Piston, 2900/3150
3	5	10369	Spacer, 2”, 2900/3150
		16141	Spacer, Port Ring, HW, 180°
4	2	10368	Spacer, Narrow, 3150/3900
		10368-01	Spacer, Quad Ring, Brass, HW, 180°
5	1	16130	Piston, High Backwash
		19611-01	Piston Assy, 3150, NHWBP, O-ring
6	1	14818	Ring, Piston Rod, Snap
7	1	15125	Rod, Piston, 3150
		19708	Rod, Piston, 3150 NHWBP
8	1	14922	O-ring, -035, Piston
9	1	16398-01	End Plug Assy, 3150, White
		16398-11	End Plug Assy, 3150, Black
10	1	15112	Seal, 3150 Adapter Base
11	1	17407	Adapter, 3150, Sidemount
12	2	40118	Screw, Sckt Hd, 1/2 - 13 Unc
Options			
▲13	1	15117-01	Adapter, 3150, Machined
*▲14	1	15247	O-ring, -229
▲15	1	13575	O-ring, -240
		15210	O-ring, -343, Park Tank
*▲16	1	19608-20	Disperser, Commercial, 2”, 3150
Options			
16	1	40316	Adapter, Sidemount
17	1	16804-01	O-ring, -150
18	1	40368	O-ring, -160, Sidemount, Flange
19	1	40365	Base, 3130/3150, Rotating
20	7	40375	Washer, Flat, 3/8, Type A
21	7	19768	Screw, Hex Hd, 3/8 - 16 x 1, Cap 18-8

* Not used with a fixed sidemount.

▲ Not used with a rotating sidemount.

Control Drive Assembly

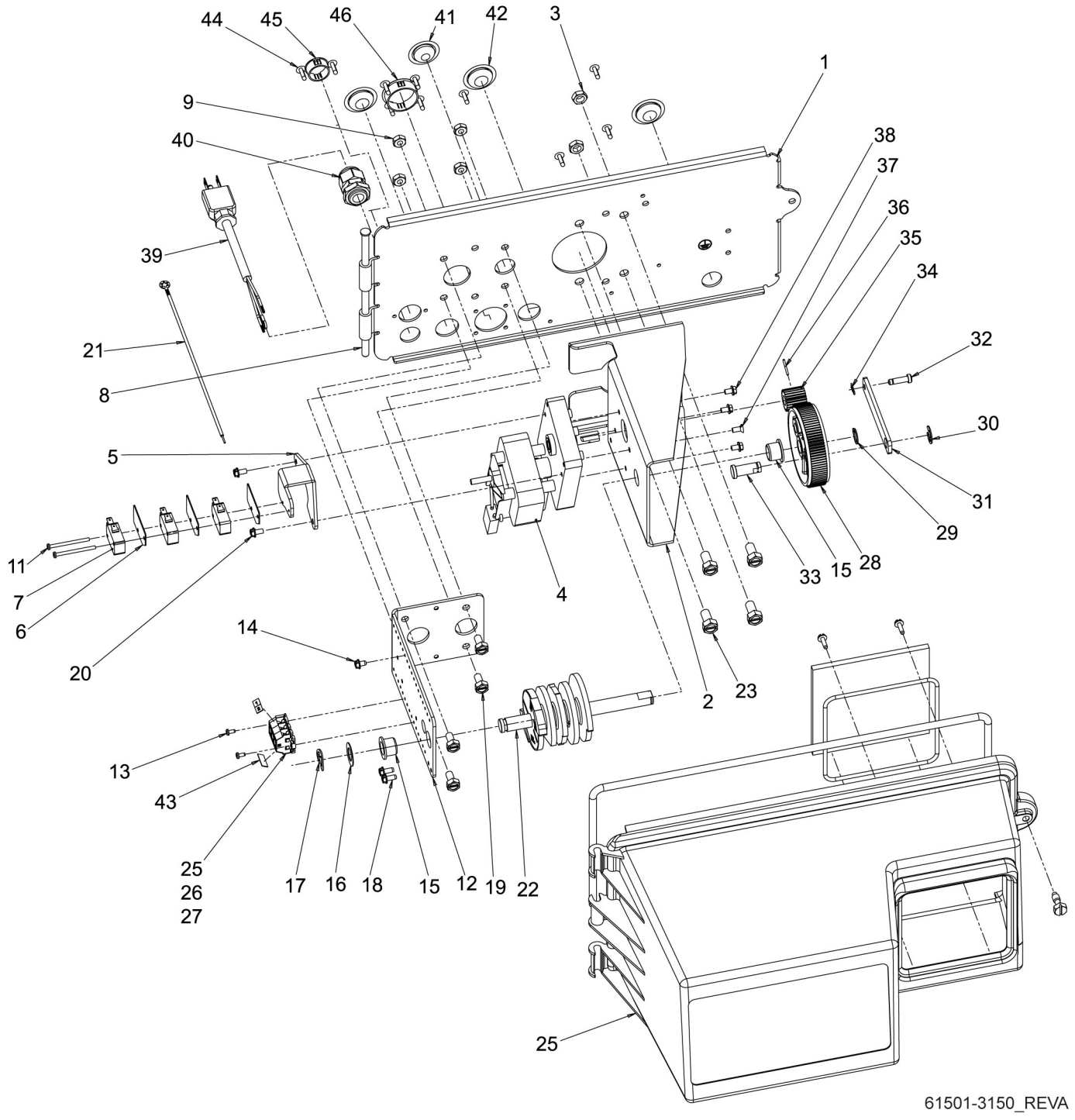

Item No.	Quantity	Part No.	Description
1	1	19304-04	Backplate, 3150/3900, Upper
2	1	15120-01	Bracket, Motor Mtg, 3150/3900 Environmental
3	2	16346	Nut, Hex, Jam, 5/16 - 18
4	1	40392	Motor, Drive, 115V, 50/60 Hz, Sp
		40390	Motor, Drive, 220V, 50 Hz, Sp, Fam 3
		40391	Motor, Drive, 24V, 50/60 Hz, Sp Fam 3
5	1	17797	Bracket, Switch Mounting, 3150/3900
6	4	10302	Insulator, Limit Switch
7	3	10218	Switch, Micro
8	1	17845-03	Pin, Hinge, 3150/3900, Env
9	4	11235	Nut, Hex, 1/4 -20, Mach Screw, Zinc
10	2	13365	Washer, Lock, #4, External
11	2	40080	Screw, Rd Hd, 4-40 x 1 1/2”
12	1	16053	Bracket, Brine Side
13	2	40133	Screw, Pan Hd, 4-40 x 1/4
14	1	15226-6	Terminal Block
15	2	16052	Bushing, 3150/3900
16	1	16059	Washer, SS, .88, 3150/3900
17	1	16051	Ring, Retaining, Bowed
18	2	10300	Screw, Slot Hex Wsh, 18-8 x 3/8
19	4	10231	Screw, Slot Hex, 1/4 - 20 x 1/2
20	2	14202-01	Screw, Hex Wsh Hd, 8 x 5/16
21	1	10475-01	Wire, Ground
22	1	16494-03	Cam Assy, 3150/3900 Signal After Brine Fill
		16494-05	Cam Assy, 3150/3900 Upper Signal After Rapid Rinse
23	4	11224	Screw, Hex Hd, 5/16 - 18 x 5/8
24	1	60240-02	Cover Assy, 3150/3900 Env, Black
25	2	41084	Terminal Block, Segment, Gray
26	1	41085	Endplate, Terminal Bloack, Gray
27	1	40174	Terminal Block, Green/Yellow
28	1	16046	Gear, Drive
29	1	16050	Ring, Retaining
30	1	11774	Ring, Retaining
31	1	16047	Link, Drive
32	1	11709	Pin, Drive Link
33	1	16048	Bearing, Drive Link
34	1	11898	Clip, 3150/3900
35	1	16045	Pinion, Drive
36	1	11381	Pin, Roll, 2900/3900
37	1	11080	Screw, Flt Hd Mach, 8-32 x 3/8
38	3	10872	Screw, Hex Wsh, 8-32 x 17/64
39	1	40084-12	Power Cord, 12’ US, Round, 120V
40	1	17967	Fitting Assy, Liquid Tight, Blk
41	1	19691	Plug, .750 Dia, Recessed, Black
42	3	19591	Plug, .8750 Hole, Recessed, Black
43	2	15250	Label, Terminal Strip
44	10	19800	Plug, .140 Dia, White
45	1	15806	Plug, Hole, Heyco #2693
46	1	17421	Plug, 1.20 Hole
Not Shown	1	17470	Cable Guide Assy, 2850/3150
Not Shown	1	19856	Ring, Retaining
Not Shown	1		Timer
Not Shown	1	40396	Harness, Drive, Environmental
Not Shown	1	16427-04	Wire, Lead, 12”, White
Not Shown	1	40396	Harness, Drive, Environmental
Not Shown	1	14924	Strain Relief Heyco #1247
Not Shown	1	15513	Meter Cable, 17.5”

* Specify number of terminals